Technical Data Sheet GP-Series
Execution with spring loaded stuffing box packing

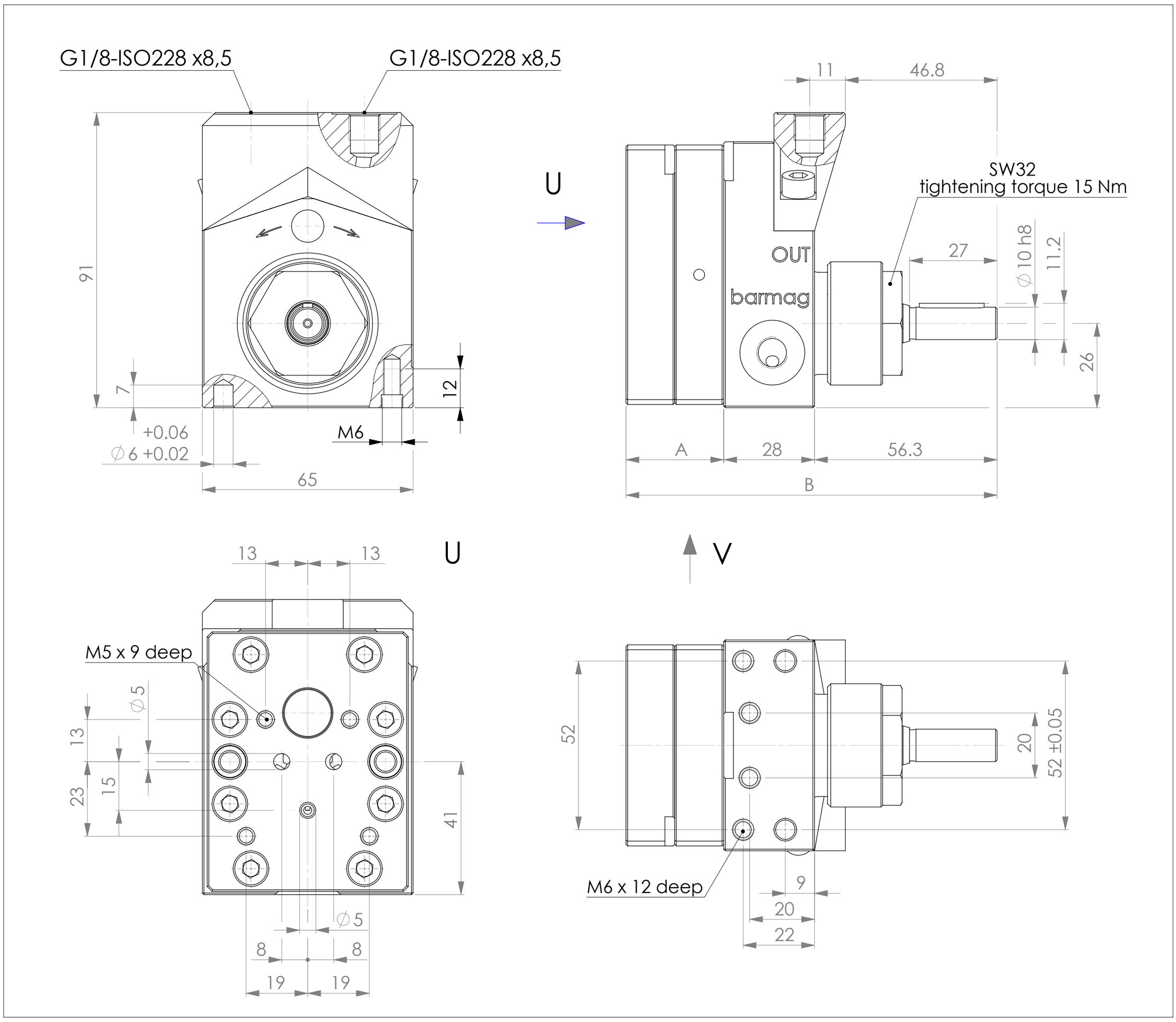

Assembly dimensions

pump model	feed capacity cc/rev	A mm	B mm	wight ca. kg	max.counter-pressure at outlet bar
GP121C	1,2	21,3	105,6	1,8	20
GP301C	3,0	22,6	106,9	1,9	20
GP601C	6,0	30,1	114,4	2,2	20
GP901C	9,0	37,7	122,0	2,5	20